Rexroth
Bosch Group

4/2, 4/3, and 5/2, 5/3 proportional directional valve, pilot operated, without electrical position feedback without/with integrated electronics (OBE)

RE 29115/08.13
Replaces: 10.05

Type .WRZ..., .WRZE... and .WRH...

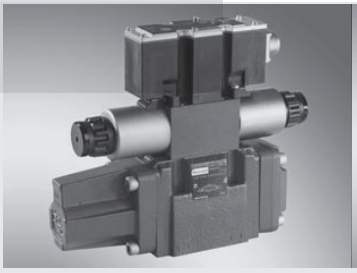

Type 4WRZE 10 …-7X/...K31/...
with integrated electronics (OBE)

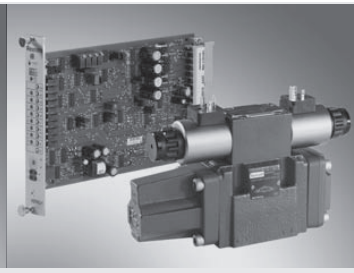

Type 4WRZ 10 …-7X/…K4/...
with the corresponding control electronics (separate order)

Sizes 10 to 52
Component series 7X
Maximum operating pressure 350 bar
Maximum flow 2800 l/min

Table of contents

Information on available spare parts:
www.boschrexroth.com/spc

Features

- Pilot operated, 2-stage proportional directional valve with integrated electronics (OBE) with type 4WRZE
- Control of flow direction and size
- Operation by means of proportional solenoids with central thread and detachable coil
- For subplate mounting:
  Porting pattern according to ISO 4401
- Manual override, optional
- Spring-centered control spool
- Control electronics
  - Type .WRZE…
    - Integrated electronics (OBE) with voltage or current input (A1 and/or F1)
  - Type .WRZ…
    - Digital or analog amplifier in Euro-card format
    - Analog amplifier in modular design

Ordering codes (types 4WRZ and 4WRH; sizes 10 to 32 subplate mounting; size 52 flange connection)

4WR_ | | | –7X | / | | | | |

Hydraulic actuation **= H**
Electro-hydraulic actuation **= Z**

Type WRZ:
For external electronics **= no code**
With integrated electronics **= E**

Size 10 **= 10**
Size 16 **= 16**
Size 25 **= 25**
Size 32 **= 32**
Size 52 **= 52**

For **control spool symbols,** see page 3

Rated flow in l/min at valve pressure differential ***Δp*** = 10 bar

Size 10
25 l/min **= 25**
50 l/min **= 50**
85 l/min **= 85**

Size 16
100 l/min **= 100**
125 l/min **= 125**
150 l/min **= 150**
180 l/min **= 180**

Size 25
220 l/min **= 220**
325 l/min **= 325**

Size 32
360 l/min **= 360**
520 l/min **= 520**

Size 52
1000 l/min **= 1000**

Component series 70 to 79 **= 7X**
(70 to 79: Unchanged installation and connection dimensions)

For subplate mounting **= no code**
For flange connection (size 52 only) **= F**

Pilot control valve size 6
Proportional solenoid with detachable coil **= 6E** [1)]

Supply voltage
Direct voltage 24 V **= G24** [1)]

Without manual override **= no code**
With concealed manual override **= N9** [1, 2)]

Without special type of protection **= no code**
Seawater-resistant **= J** [3)]

Pilot oil supply and return
External pilot oil supply, external pilot oil return **= no code**
Internal pilot oil supply, external pilot oil return **= E**
Internal pilot oil supply, internal pilot oil return **= ET**
External pilot oil supply, internal pilot oil return **= T**
(only possible without code for size 52 and type 4WRH)

					*

For further details, see the plain text

M = NBR seals
V = FKM seals

no code = Without pressure reducing valve
D3 [1] **=** With pressure reducing valve ZDR 6 DP0-4X/40YM-W80 (not adjustable)

Electronics interface
A1 = Command value ±10 V
F1 = Command value 4 to 20 mA
no code = For types WRZ and WRH

Electrical connection type WRZ:
K4 [1, 4] **=** **Without** mating connector, with connector according to DIN EN 175301-803
Mating connector, separate order, see page 27

Type WRZE:
K31 [1, 4] **=** **Without** mating connector, with connector according to DIN EN 175201-804
Mating connector, separate order, see page 27

[1] Not applicable with types 4WRH
[2] For version "J"→"N" instead of "N9"
[3] For information on the seawater-resistant version, see data sheet 29115-M
[4] For version "J" = seawater-resistant **only** "K31"

Electric special types of protection available on request.

Control spool symbols

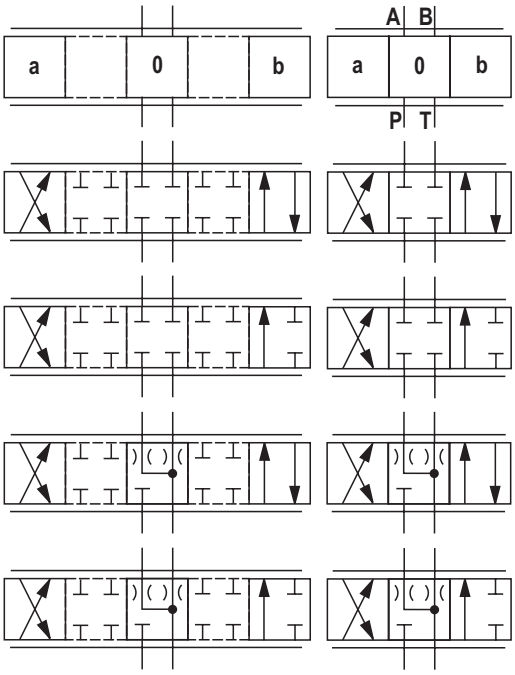

= E
E1-

= E3-

= W6-
W8-

= W9-

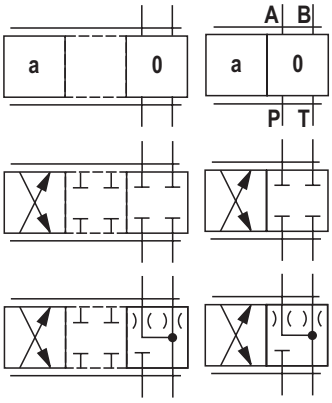

= EA [1]

= W6A [1]

[1] Not for type 4WRH

With symbols E1- and W8-: P → A: q_V B → T: $q_V/2$
P → B: $q_V/2$ A → T: q_V

With symbols E3- and W9-: P → A: q_V B → T: Blocked
P → B: $q_V/2$ A → T: q_V

(differential circuit, piston top at port A)

Notice: With symbols W6-, W8-, W9-, W6A, there is a connection from A → T and B → T with less than 2% of the respective nominal cross-section in switching position "0".

Ordering codes (types 4WRZ 52 and 4WRH 52; subplate mounting)

5WR_		52		1000 – 7X /									*

Hydraulic actuation = **H**
Electro-hydraulic actuation = **Z**

Type WRZ:
For external electronics = **no code**
With integrated electronics = **E**

Size 52 = **52**

For **control spool symbols,** see page 5

Rated flow in l/min at valve pressure differential ***Δp*** = 10 bar
1000 l/min = **1000**

Component series 70 to 79 = **7X**
(70 to 79: Unchanged installation and connection dimensions)

Pilot control valve size 6
Proportional solenoid with detachable coil = **6E** [1)]

Supply voltage
Direct voltage 24 V = **G24** [1)]

Without manual override = **no code**
With concealed manual override = **N9** [1, 2)]

Without special type of protection = **no code**
Seawater-resistant = **J** [3)]

Electrical connection type WRZ:
Without mating connector, with connector according to DIN EN 175301-803 = **K4** [1, 4]
Mating connector, separate order, see page 27
Type WRZE:
Without mating connector, with connector according to DIN EN 175201-804 = **K31** [1, 4]
Mating connector, separate order, see page 27

Electronics interface
Command value ±10 V = **A1**
Command value 4 to 20 mA = **F1**
For types WRZ and WRH = **no code**

Without pressure reducing valve = **no code**
With pressure reducing valve ZDR 6 DP0-4X/40YM-W80 (not adjustable) = **D3** [1)]

NBR seals = **M**
FKM seals = **V**

For further details, see the plain text

[1)] Not applicable with types 4WRH

[2)] For version "J"→"N" instead of "N9"

[3)] For information on the seawater-resistant version, see data sheet 29115-M

[4)] For version "J" = seawater-resistant **only** "K31"

Electric special types of protection available on request.

Control spool symbols

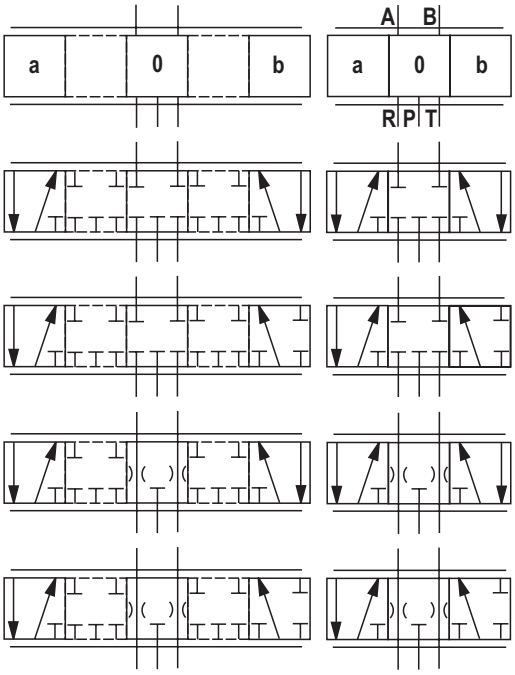

= E
E1-

= E3-

= W6-
W8-

= W9-

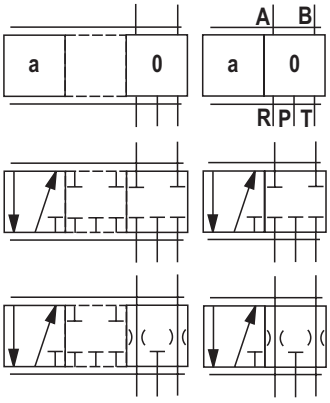

= EA [1)]

= W6A [1)]

[1)] Not for type 4WRH

With symbols E1- and W8-: P → A: q_V B → T: $q_V/2$
P → B: $q_V/2$ A → R: q_V

With symbols E3- and W9-: P → A: q_V B → T: Blocked
P → B: $q_V/2$ A → R: q_V

(differential circuit, piston top at port A)

Notice:

- Only external pilot oil supply and return possible
- With control spool W6-, W8-, W9-, W6A, there is a connection from A → R and B → T with less than 2% of the respective nominal cross-section in switching position "0".

Symbols (simplified)

With electro-hydraulic actuation and for external electronics

Type 4WRZ…-7X./… and
type 4WRZ 52…-7XF/…

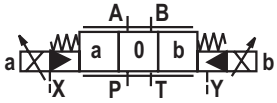

X = external
Y = external

Type 4WRZ…A-7X./… and
type 4WRZ 52 A…-7XF/…

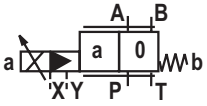

Type 5WRZ 52-7X./…

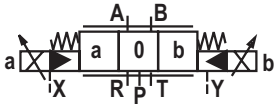

X = external
Y = external

Type 5WRZ 52 A-7X./…

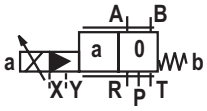

Type 4WRZ…-7X./…ET…

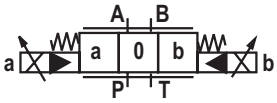

X = internal
Y = internal

Type 4WRZ.A…-7X./…ET…

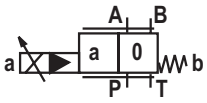

With electro-hydraulic actuation and for integrated electronics

Type 4WRZE…-7X./… and
type 4WRZE 52…-7XF/…

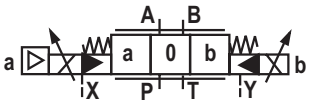

X = external
Y = external

Type 4WRZE…A-7X./… and
type 4WRZE 52 A…-7XF/…

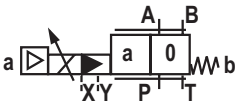

Type 5WRZE 52-7X./…

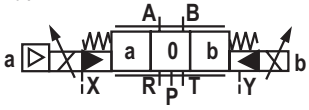

X = external
Y = external

Type 5WRZE 52 A-7X./…

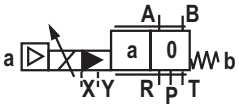

Type 4WRZE…-7X./…ET…

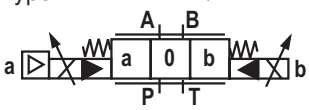

X = internal
Y = internal

Type 4WRZE.A…-7X./…ET…

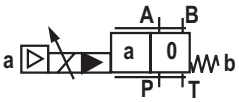

With hydraulic actuation

Type 4WRH…-7X./… and
type 4WRH 52…-7XF/…

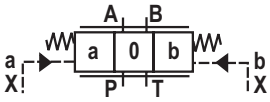

X = external
Y = external

Type 4WRH…A…-7X./… and
type 4WRH 52…-7XF/…

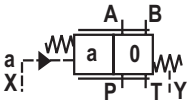

Type 5WRH 52…-7X.

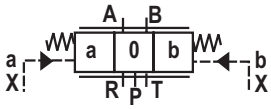

X = external
Y = external

Type 5WRH 52 A…-7X./…

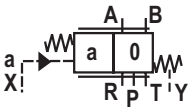

Function, section

Pilot control valve type 3DREP 6…

The pilot control valve is a 3-way pressure reducing valve that is actuated by a proportional solenoid. It converts an electrical input signal into a proportional pressure output signal and is used for all valves of the type 4WRZ... and 5WRZ...

The proportional solenoids are controllable, wet-pin DC solenoids with a central thread and a detachable coil. The solenoids are controlled by external electronics (type .WRZ...).

Set-up:

The valve basically consists of:
- Housing (1)
- Control spool (2) with pressure measuring spool (3 and 4)
- Solenoids (5 and 6) with central threads

Function:

The pressure in A or B is set by means of the proportional solenoids. The amount of the pressure depends on the current. With de-energized solenoids (5, 6), the control spool (2) is held in the central position by means of the pressure springs (8). Ports A and B are connected with T so that the hydraulic fluid can flow to the tank without obstructions.

By energizing a proportional solenoid, e.g. solenoid "a" (5), the pressure measuring spool (3) and with it the control spool (2) are moved to the right. This opens the connection from P to B and A to T via orifice-type cross-sections with progressive flow characteristic. With the surface of the pressure measuring spool (4) the pressure that builds up in channel B acts on the control spool and against the solenoid force. The pressure measuring spool (4) is supported by solenoid "b". If the pressure exceeds the value set at solenoid "a", the control spool (2) is pushed back against the solenoid force and connects B with T until the set pressure is reached again. The pressure is proportional to the solenoid current.

When the solenoid is switched off, the control spool (2) is returned into the central position by the compression springs (8).

Type 3DREP 6…

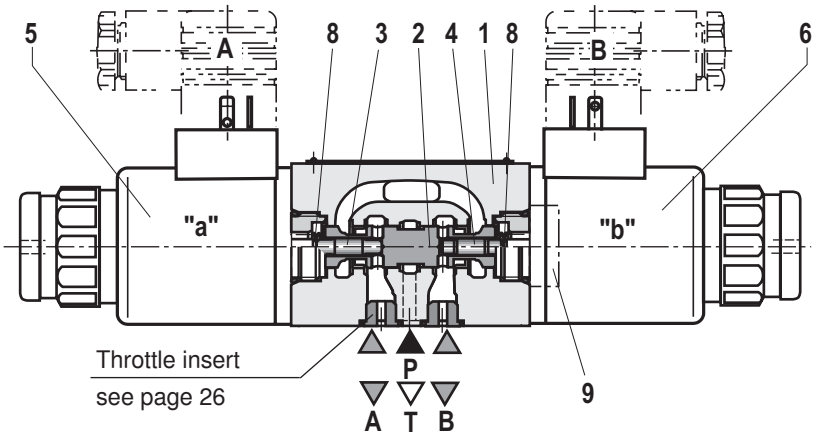

Pilot control valve with two switching positions
(type 3DREP 6…B…)

The operation of this valve version basically corresponds to the valve with 3 switching positions. However, this 2 spool position valve is only equipped with solenoid "a" (5). In the place of the second proportional solenoid there is a plug screw (9).

Information on type 3DREP 6:
Prevent the tank line from draining. If this is possible due to installation conditions, install a preload valve (with a preload pressure of approx. 2 bar).

Function, section

Pilot control valve type 3DREPE 6…

The pilot control valve is a 3-way pressure reducing valve that is actuated by a proportional solenoid. It converts an electrical input signal into a proportional pressure output signal and is used for all valves of the type 4WRZE... and 5WRZE...

The proportional solenoids are controllable, wet-pin DC solenoids with a central thread and a detachable coil. The solenoids are controlled by the integrated electronics (type .WRZE...).

Set-up:

The valve basically consists of:
- Housing (1)
- Control spool (2) with pressure measuring spool (3 and 4)
- Solenoids (5 and 6) with central threads
- Integrated electronics (7)

Function:

The pressure in A or B is set by means of the proportional solenoids. The amount of the pressure depends on the current. With de-energized solenoids (5, 6), the control spool (2) is held in the central position by means of the pressure springs (8). Ports A and B are connected with T so that the hydraulic fluid can flow to the tank without obstructions.

By energizing a proportional solenoid, e.g. solenoid "a" (5), the pressure measuring spool (3) and with it the control spool (2) are moved to the right. This opens the connection from P to B and A to T via orifice-type cross-sections with progressive flow characteristic. With the surface of the pressure measuring spool (4) the pressure that builds up in channel B acts on the control spool and against the solenoid force. The pressure measuring spool (4) is supported by solenoid "b". If the pressure exceeds the value set at solenoid "a", the control spool (2) is pushed back against the solenoid force and connects B with T until the set pressure is reached again. The pressure is proportional to the solenoid current.

When the solenoid is switched off, the control spool (2) is returned into the central position by the compression springs (8).

Type 3DREPE 6…

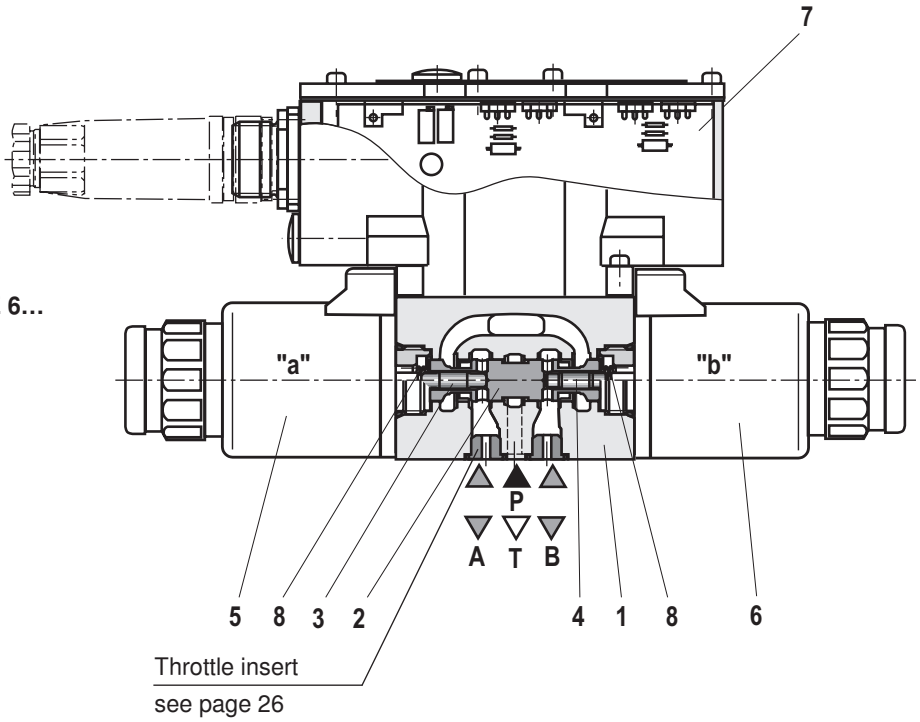

Function, section

Pilot operated proportional directional valves
Types 4WRZ… and 5WRZ.52…

Valves of type 4WRZ... are pilot operated 4-way directional valves that are actuated by proportional solenoids. They control the flow direction and size.

Valves of type 5WRZ... are equipped with an additional port "R" (only size 52).

Set-up:

The valve basically consists of:
- Pilot control valve (9) with proportional solenoids (5 and 6)
- Main valve (10) with main control spool (11) and centering spring (12)

☞ **Notice!**

Due to the design principle, internal leakage is inherent to the valves, which may increase over the life cycle.

Function:

- With de-energized solenoids (5, 6), the main control spool (11) is held in the central position by means of the centering spring (12).
- The main control spool (11) is controlled by the pilot control valve (9); the main control spool is proportionally moved, e.g. by actuating solenoid "b" (6).
  - → The control spool (2) is moved to the right, pilot oil enters the pressure chamber (13) via the pilot control valve (9) and deflects the main control spool (11) according to the electric input signal.
  - → This opens the connection from P to B and A to T via orifice-type cross-sections with progressive flow characteristic.
- Pilot oil is internally supplied to the pilot control valve via port P or externally via port X.
- Switching the solenoid off (6)
  - → The control spool (2) and main control spool (11) are moved back into the central position.
- Depending on the switching position, flow occurs from P to A and B to T or P to B and A to T (R).

An optional manual override (14 and 15) can be used to move the control spool (2) without solenoid energization.

☞ **Notice:**
Inadvertent activation of the manual override may result in uncontrollable machine movements.

Type 4WRZE…-7X/...

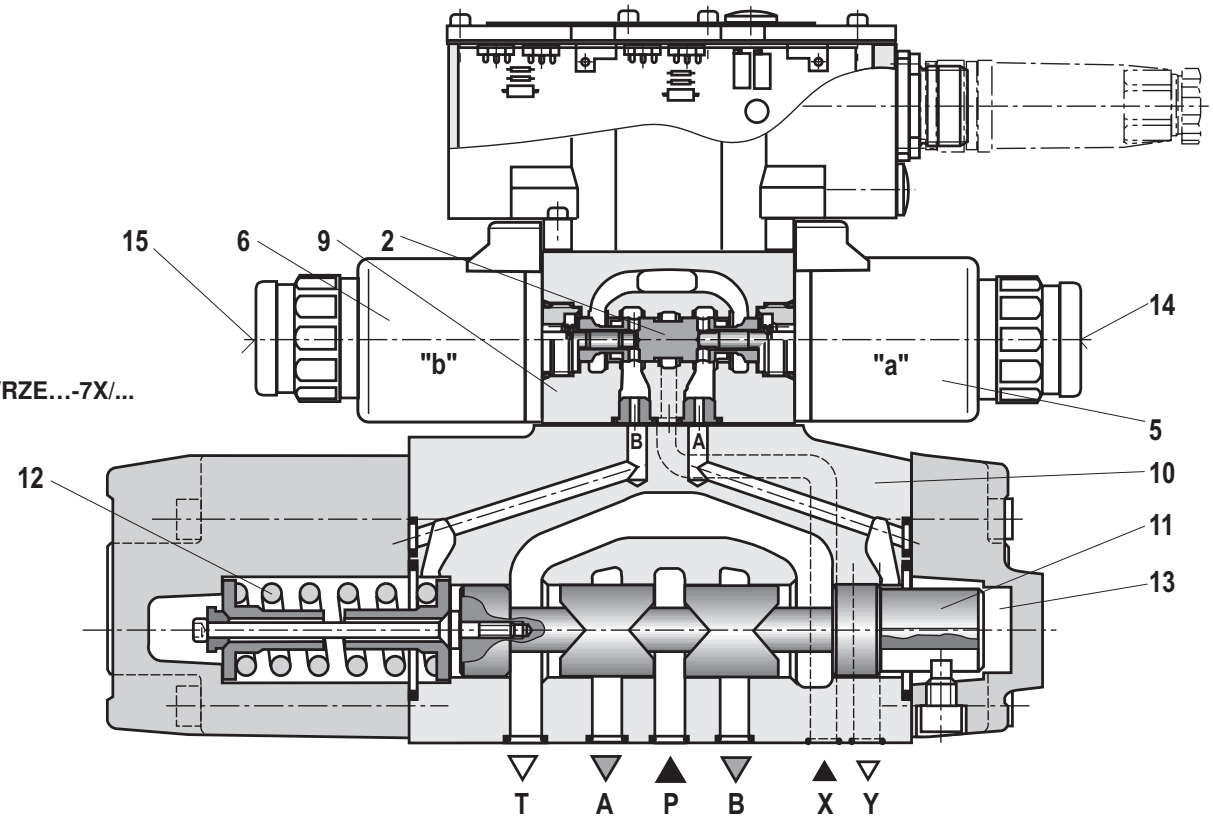

Function, section

Externally pilot operated proportional directional valves Types 4WRH… and 5WRH.52…

Valves of the type .WRH... are pilot operated proportional directional valves for external actuation via pressure control valves.

Set-up:
The valve basically consists of:
- Main valve (10) with main control spool (11) and centering spring (12)
- Diversion plate (16)

☞ **Notice!**

Due to the design principle, internal leakage is inherent to the valves, which may increase over the life cycle.

Function:
- The diversion plate (16) connects control port A that leads to the pressure chamber (13) with port Y and control port B with port X.
- If port X is pressurized, the main control spool (11) is moved to the right (P to B and A to T). If port Y is pressurized, the main control spool is moved to the left (P to A and B to T).

The pilot pressure at the main valve must not exceed 25 bar (16 bar with size 52)!

Type .WRH…-7X/…

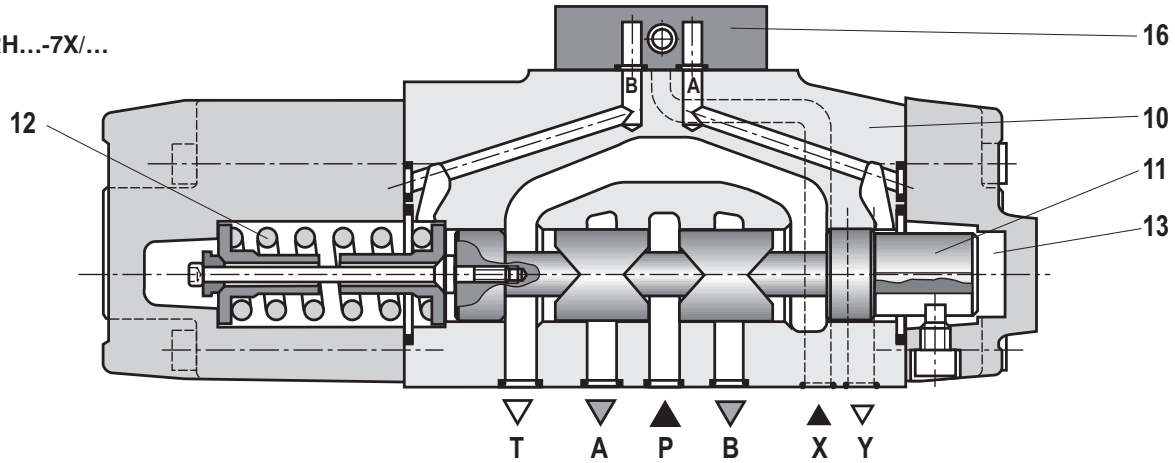

Technical data (for applications outside these parameters, please consult us!)

general

Valve type				.WRZ	.WRZE	.WRH
Installation position				Any, preferably horizontal (for commissioning information, see data sheet 07800)		
Storage temperature range			°C	–20 to +80		
Ambient temperature range			°C	–20 to +70	–20 to +50	–20 to +70
Weight	– Subplate mounting	Size 10	kg	7.8	8.0	6.1
		Size 16	kg	11.9	12.1	9.7
		Size 25	kg	18.2	18.4	18.0
		Size 32	kg	42.2	42.2	41.5
		Size 52	kg	79.5	79.7	
	– Flange connection	Size 52	kg	77.5	77.7	
	– With "D3"		kg	+0.5 in addition		
Sine test according to DIN EN 60068-2-6:2008				10 cycles, 10...2000...10 Hz with logarithmic frequency changing speed of 1 oct./min., 5 to 57 Hz, amplitude 1.5 mm (p-p), 57 to 2000 Hz, amplitude 10 g, 3 axes		
Random test according to DIN EN 60068-2-64:2009				20…2000 Hz, amplitude 0.05 g^2/Hz (10 g_{RMS}) 3 axes, 30 min testing time per axis		
Shock test according to DIN EN 60068-2-27:2010				Half sine 15 g/11 ms, 3 times in positive/3 times in negative direction per axis, 3 axes		
Humid heat, cyclic according to DIN EN 60068-2-30:2006				Variant 2 +25 °C to +55 °C, 90% to 97% relative humidity, 2 cycles at 24 hours each		

Technical data (for applications outside these parameters, please consult us!)

hydraulic (measured with HLP46, ϑ_{oil} = 40 °C ± 5 °C and p = 100 bar)

Size		Size	10	16	25	32	52
Operating pressure – Pilot control valve	External pilot oil supply	bar	30 to 100				20 to 100
	Internal pilot oil supply						–
		bar	100 to 315 only with "D3"	100 to 350 only with "D3"			
– Main valve		bar	Up to 315	Up to 350	Up to 350	Up to 350	Up to 350
Return flow pressure	– Port T (port R) (external pilot oil return)	bar	Up to 315	Up to 250	Up to 250	Up to 150	Up to 250
	– Port T (internal pilot oil return)	bar	Up to 30	Up to 30	Up to 30	Up to 30	–
	– Port Y	bar	Up to 30	Up to 30	Up to 30	Up to 30	Up to 30
Flow of the main valve		l/min	Up to 170	Up to 460	Up to 870	Up to 1600	Up to 2800
Pilot flow at ports X and Y with stepped input signal 0 → 100%		l/min	3.5	5.5	7	15.9	7
Pilot volume for switching process 0 → 100%		cm^3	1.7	4.6	10	26.5	54.3
Hydraulic fluid			See table below				
Hydraulic fluid temperature range (at the valve working ports)		°C	–20 to +80 (preferably +40 to +50)				
Viscosity range		mm^2/s	20 to 380 (preferably 30 to 46)				
Maximum admissible degree of contamination of the hydraulic fluid, cleanliness class according to ISO 4406 (c)							
	– Pilot control valve		Class 18/16/13 [1]				
	– Main valve		Class 20/18/15 [1]				
Hysteresis		%	≤ 6				

[1] The cleanliness classes specified for the components must be adhered to in hydraulic systems. Effective filtration prevents faults and at the same time increases the life cycle of the components.
For the selection of the filters, see www.boschrexroth.com/filter

Hydraulic fluid		Classification	Suitable sealing materials	Standards
Mineral oils and related hydrocarbons		HL, HLP	NBR, FKM	DIN 51524
Flame-resistant	– containing water	HFC (Fuchs HYDROTHERM 46M, Petrofer Ultra Safe 620)	NBR	ISO 12922

☞ **Important information on hydraulic fluids!**

- For more information and data on the use of other hydraulic fluids refer to data sheet 90220 or contact us!
- There may be limitations regarding the technical valve data (temperature, pressure range, life cycle, maintenance intervals, etc.)!
- The flash point of the process and operating medium used must be 40 K greater than the maximum solenoid surface temperature.
- **Flame-resistant – containing water**: The maximum pressure differential per control edge is 175 bar. Pressure preloading at the tank port > 20% of the pressure differential; otherwise, increased cavitation.
- Life cycle as compared to operation with mineral oil HL, HLP 50% to 100%

Technical data (for applications outside these parameters, please consult us!)

electric

Valve type			.WRZ [1]	.WRZE
Voltage type			Direct voltage	
Command value overlap		%	15	
Maximum current		A	1.5	2.5
Solenoid coil resistance	– Cold value at 20 °C	Ω	4.8	2
	– Maximum hot value	Ω	7.2	3
Duty cycle		%	100	
Maximum coil temperature [3]		°C	150	
Protection class of the valve according to EN 60529			IP65 with mating connectors mounted and locked	

Control electronics

Type 4WRZ	Digital amplifier in Euro-card format [2]		VT-VSPD-1-2X/... according to data sheet 30523	
	Analog amplifier in Euro-card format [2] with 1 ramp time		VT-VSPA2-1-2X/V0/T1, according to data sheet 30110	
	Analog amplifier in Euro-card format [2] with 5 ramp times		VT-VSPA2-1-2X/V0/T5, according to data sheet 30110	
	Analog module amplifier [2]		VT-11118-1X/... according to data sheet 30218	
Type 4WRZE			Integrated in the valve, see page 14	
	Analog command value module [2]		VT- SWMA-1-1X/... according to data sheet 29902	
	Analog command value module [2]		VT-SWMAK-1-1X/... according to data sheet 29903	
	Digital command value card [2]		VT-HACD-1-1X/… according to data sheet 30143	
	Analog command value card [2]		VT-SWKA-1-1X/... according to data sheet 30255	
Current consumption	I_{max}	A	–	1.8
	– Impulse current	A	–	3
Command value signal	– Voltage input "A1"	V	–	±10
	– Current input "F1"	mA	–	4 to 20

[1] With Bosch Rexroth AG control electronics

[2] Separate order

[3] Due to the temperatures occurring at the surfaces of the solenoid coils, the European standards ISO 13732-1 and EN 982 need to be adhered to.

Electrical connection

For type .WRZ... (**for** external electronics – **not** with version **"J"** = seawater-resistant)
For mating connectors, see page 27

Connection at the connector

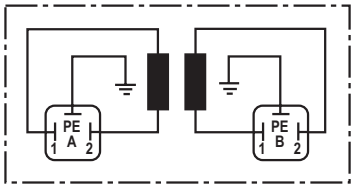

Connection to mating connector

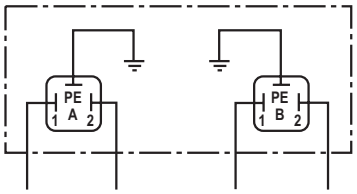

to the amplifier to the amplifier

For type .WRZ... (**for** external electronics – with version **"J"** = seawater-resistant)
For mating connectors, see page 27

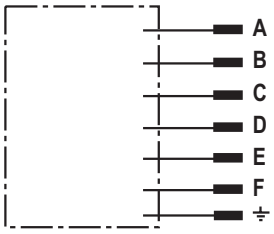

External electronics

Contact	Connection with
A	Solenoid A
B	Solenoid B
C	Solenoid A
D	Solenoid B
E	n.c.
F	n.c.
PE	Valve housing

For type .WRZE... (**with** integrated electronics (OBE) and with version **"J"** = seawater-resistant)
For mating connectors, see page 27

Connector pin assignment	Contact	Signal with A1	Signal at F1
Supply voltage	A	24 VDC (***u***(t) = 19.4 to 35 V); I_{max} = 2 A	
	B	0 V	
Reference (actual value)	C	Cannot be used [1)]	
Differential amplifier input	D	±10 V; R_e > 50 kΩ	4 to 20 mA; R_e > 100 Ω
(Command value)	E	Command value reference potential	
	F	Cannot be used [1)]	
Protective grounding conductor	PE	Connected to cooling element and valve housing	

[1)] Contacts C and F must not be connected!

Command value: A positive command value (0 to 10 V or 12 to 20 mA) at D and a reference potential at E result in a flow from P to A and B to T.
A negative command value (0 to –10 V or 12 to 4 mA) at D and a reference potential at E result in a flow from P to B and A to T.
If the valve and the solenoid are on side "a" (control spool variants EA and W6A), a positive command value at D and a reference potential at E result in flow from P to B and A to T.

Connection cable: Recommendation:
- Up to 25 m cable length, type LiYCY 5 x 0.75 mm²
- Up to 50 m 25 m cable length, type LiYCY 5 x 1.0 mm²

External diameter 6.5 to 11 mm
Only install the shield on the supply side on the protective grounding conductor.

Block diagram of the integrated electronics (OBE) for type WRZE

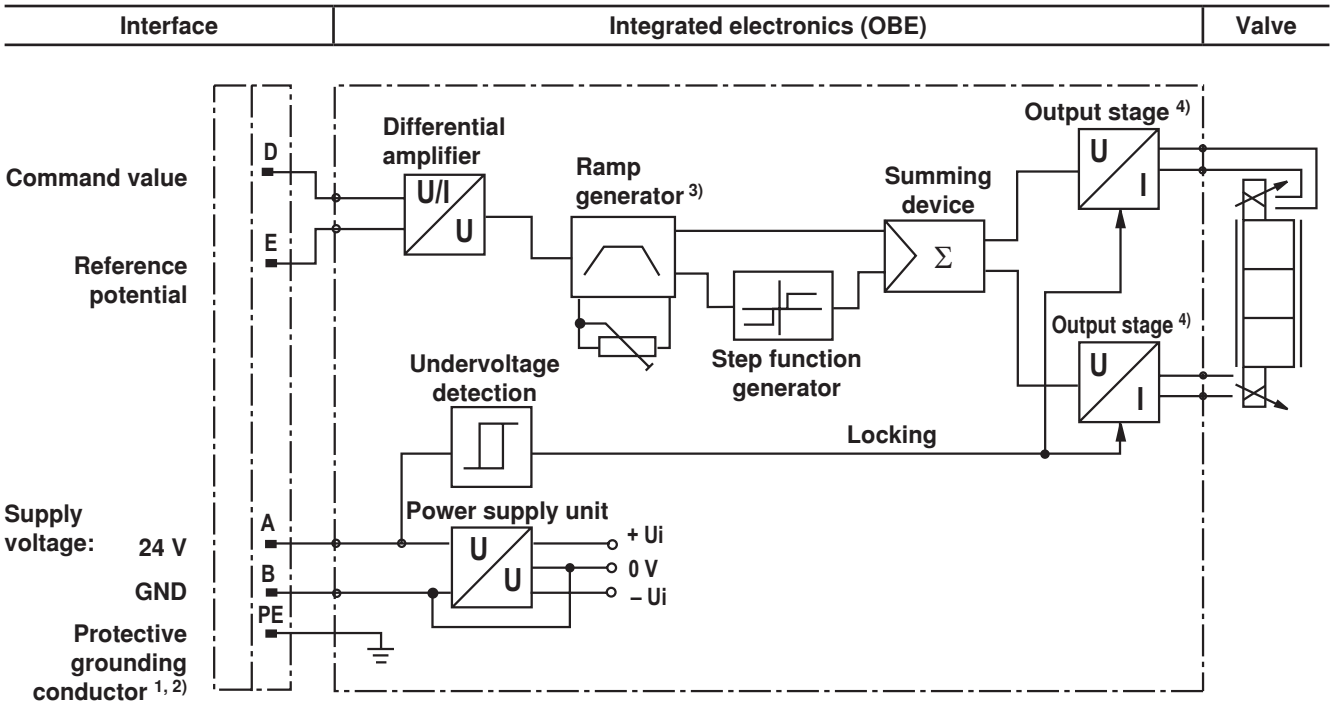

1) Port PE is connected to the cooling element and the valve housing
2) The protective grounding conductor is screwed to the valve housing and cover
3) Ramp can be set from 0 to 2.5 s from the outside, identical for T_{up} and T_{down}
4) The output stages are current-controlled

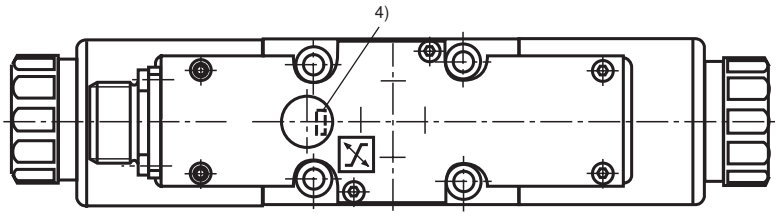

Characteristic curves size 10 (control spool "E, W6-, EA, W6A" as well as HLP46, ϑ_{oil} = 40 °C ±5 °C and p = 100 bar)

25 l/min rated flow at 10 bar valve pressure differential

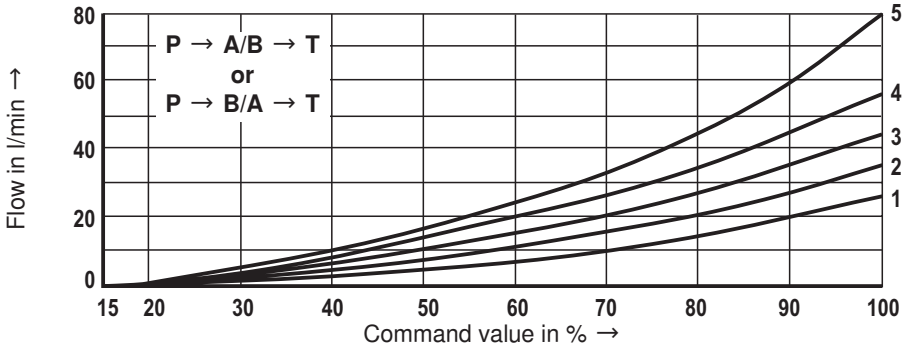

1 Δp = 10 bar, constant
2 Δp = 20 bar, constant
3 Δp = 30 bar, constant
4 Δp = 50 bar, constant
5 Δp = 100 bar, constant

50 l/min rated flow at 10 bar valve pressure differential

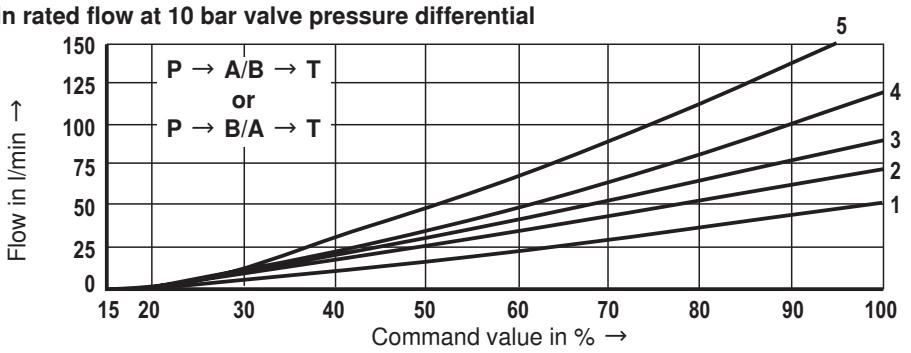

1 Δp = 10 bar, constant
2 Δp = 20 bar, constant
3 Δp = 30 bar, constant
4 Δp = 50 bar, constant
5 Δp = 100 bar, constant

85 l/min rated flow at 10 bar valve pressure differential

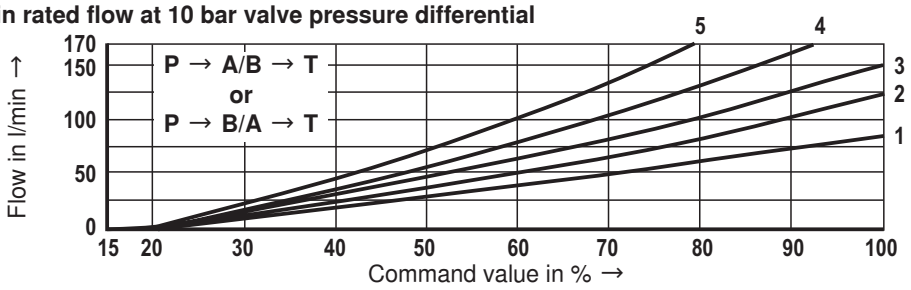

1 Δp = 10 bar, constant
2 Δp = 20 bar, constant
3 Δp = 30 bar, constant
4 Δp = 50 bar, constant
5 Δp = 100 bar, constant

Δp = valve pressure differential according to DIN 24311 (inlet pressure p_P minus load pressure p_L minus return flow pressure p_T)

Transition functions with stepped, electric input signals, measured at p_{St} = 50 bar

Type 4WRZ...

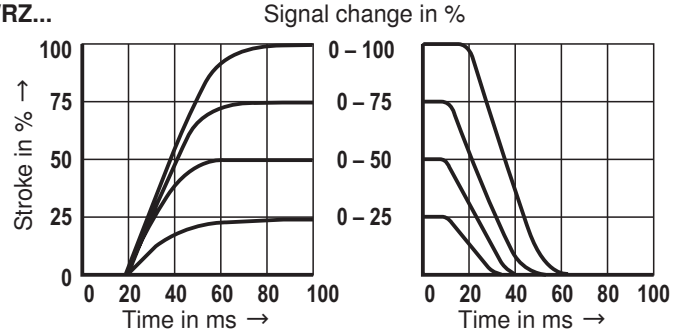

Type 4WRZE...

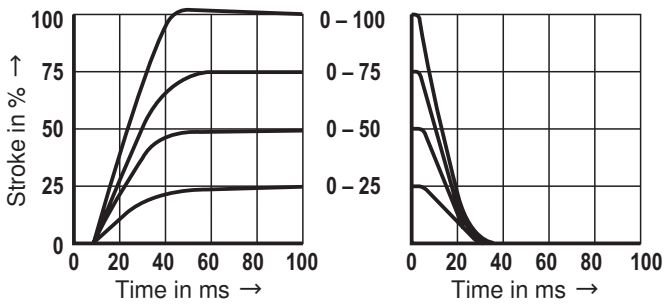

Characteristic curves size 16 (control spool "E, W6-, EA, W6A" as well as HLP46, ϑ_{oil} = 40 °C ±5 °C and p = 100 bar)

100 l/min rated flow at 10 bar valve pressure differential

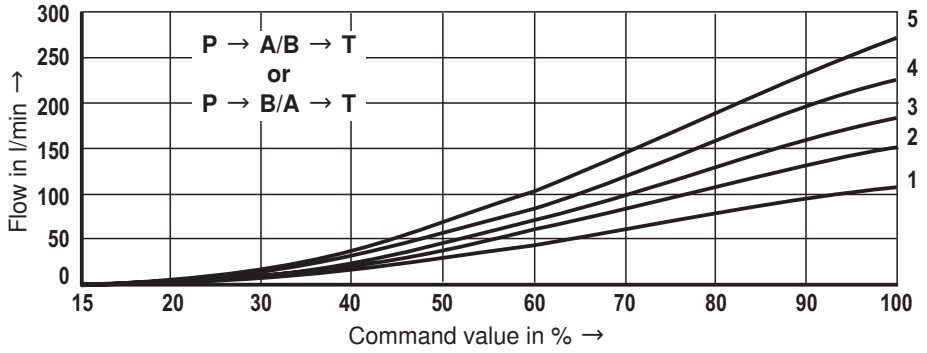

1 Δp = 10 bar, constant
2 Δp = 20 bar, constant
3 Δp = 30 bar, constant
4 Δp = 50 bar, constant
5 Δp = 100 bar, constant

125 l/min rated flow at 10 bar valve pressure differential

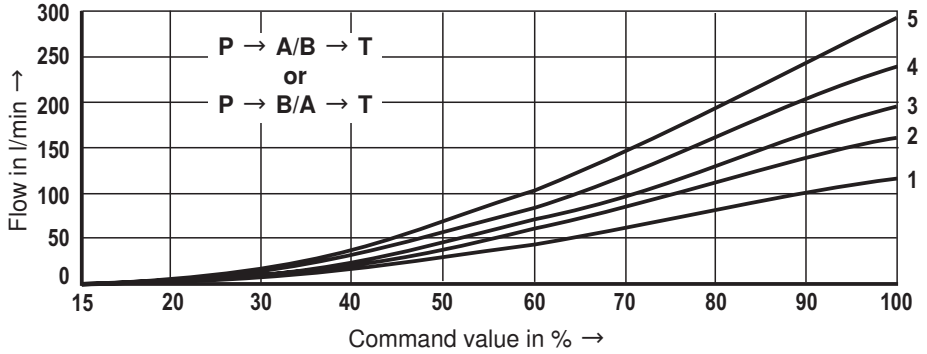

1 Δp = 10 bar, constant
2 Δp = 20 bar, constant
3 Δp = 30 bar, constant
4 Δp = 50 bar, constant
5 Δp = 100 bar, constant

150 l/min rated flow at 10 bar valve pressure differential

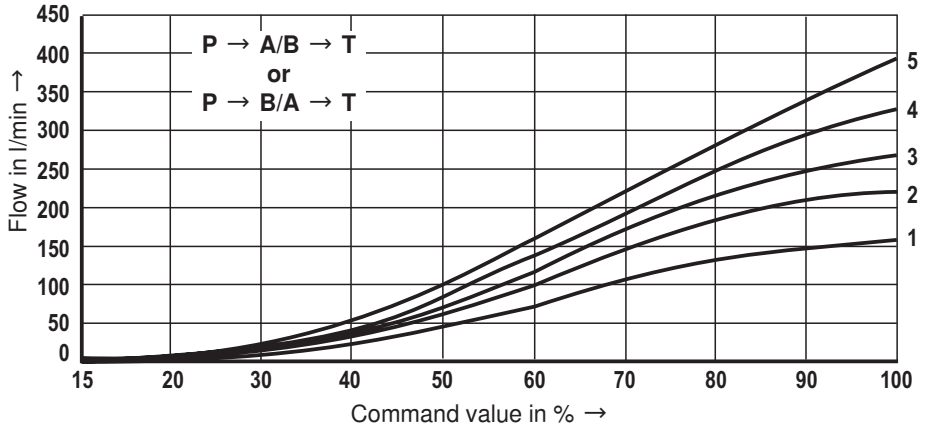

1 Δp = 10 bar, constant
2 Δp = 20 bar, constant
3 Δp = 30 bar, constant
4 Δp = 50 bar, constant
5 Δp = 100 bar, constant

180 l/min rated flow at 10 bar valve pressure differential

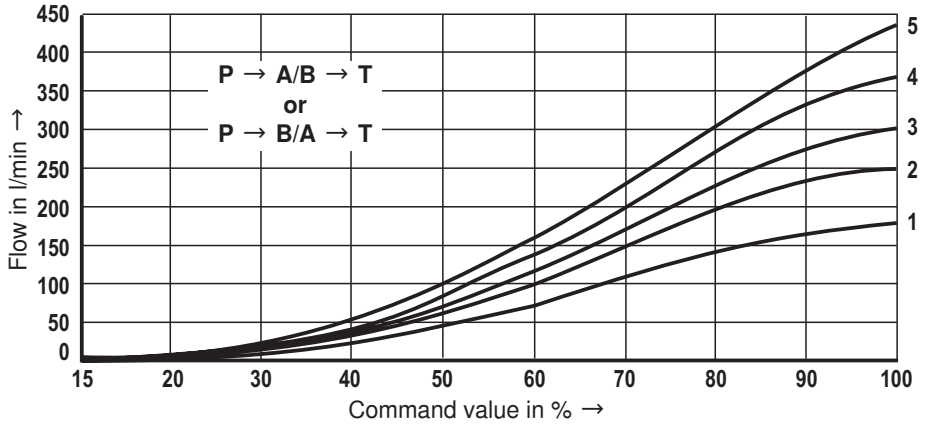

1 Δp = 10 bar, constant
2 Δp = 20 bar, constant
3 Δp = 30 bar, constant
4 Δp = 50 bar, constant
5 Δp = 100 bar, constant

Δp = valve pressure differential according to DIN 24311 (inlet pressure p_P minus load pressure p_L minus return flow pressure p_T)

Characteristic curves size 16 (control spool "E, W6-, EA, W6A" as well as HLP46, ϑ_{oil} = 40 °C ±5 °C and p = 100 bar)

Transition functions with stepped, electric input signals, measured at p_{St} = 50 bar

Type 4WRZ...

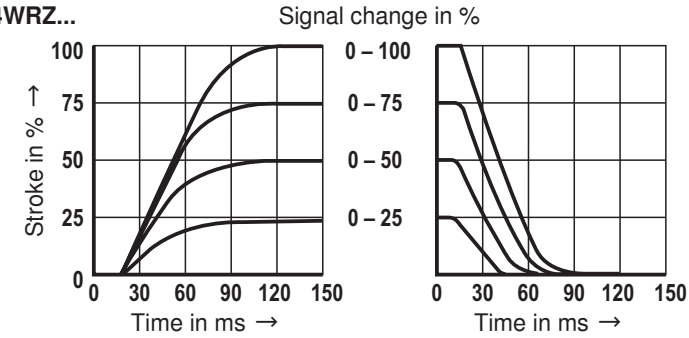

Type 4WRZE...

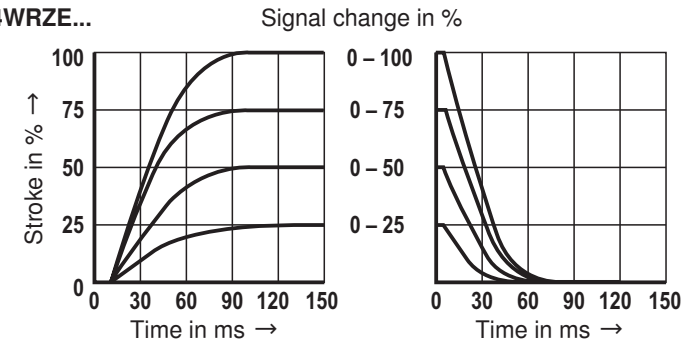

Characteristic curves size 25 (control spool "E, W6-, EA, W6A" as well as HLP46, ϑ_{oil} = 40 °C ±5 °C and p = 100 bar)

220 l/min rated flow at 10 bar valve pressure differential

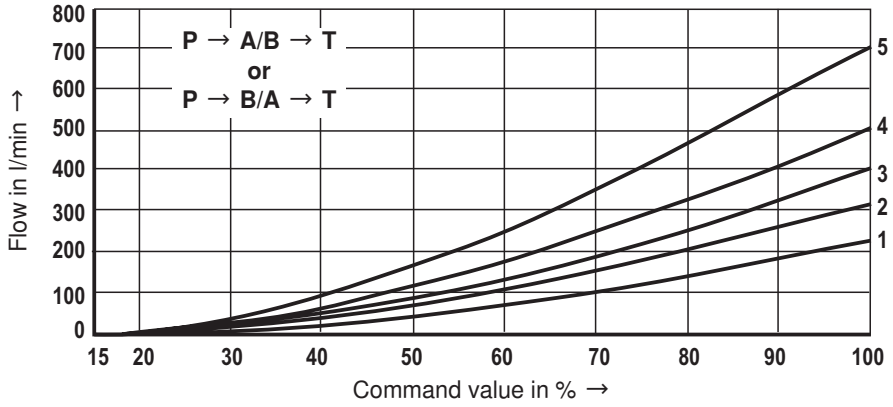

1 Δp = 10 bar, constant
2 Δp = 20 bar, constant
3 Δp = 30 bar, constant
4 Δp = 50 bar, constant
5 Δp = 100 bar, constant

325 l/min rated flow at 10 bar valve pressure differential

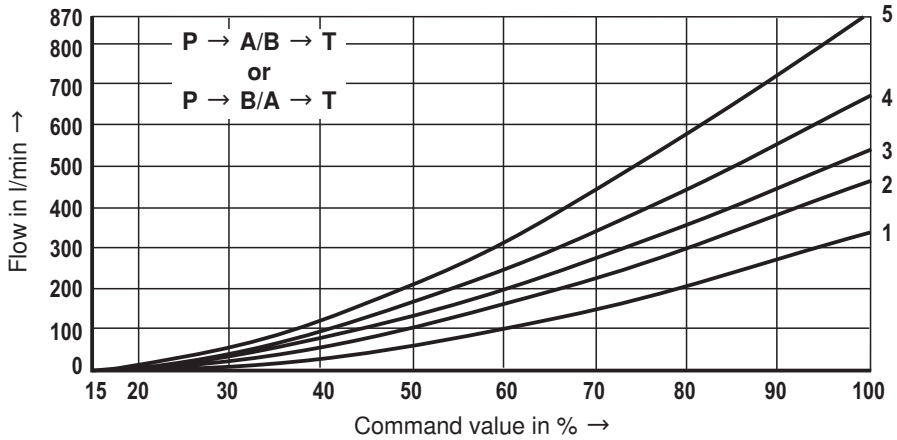

1 Δp = 10 bar, constant
2 Δp = 20 bar, constant
3 Δp = 30 bar, constant
4 Δp = 50 bar, constant
5 Δp = 100 bar, constant

Δp = valve pressure differential according to DIN 24311 (inlet pressure p_P minus load pressure p_L minus return flow pressure p_T)

Transition functions with stepped, electric input signals, measured at p_{St} = 50 bar

Type 4WRZ...

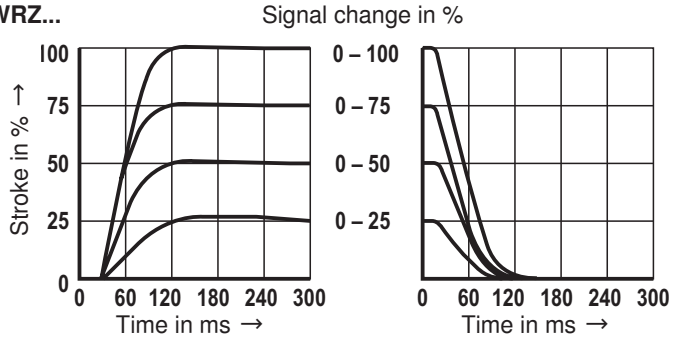

Type 4WRZE...

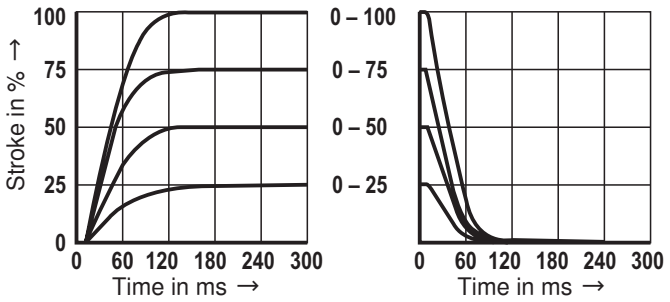

Characteristic curves size 32 (control spool "E, W6-, EA, W6A" as well as HLP46, ϑ_{oil} = 40 °C ±5 °C and p = 100 bar)

360 l/min rated flow at 10 bar valve pressure differential

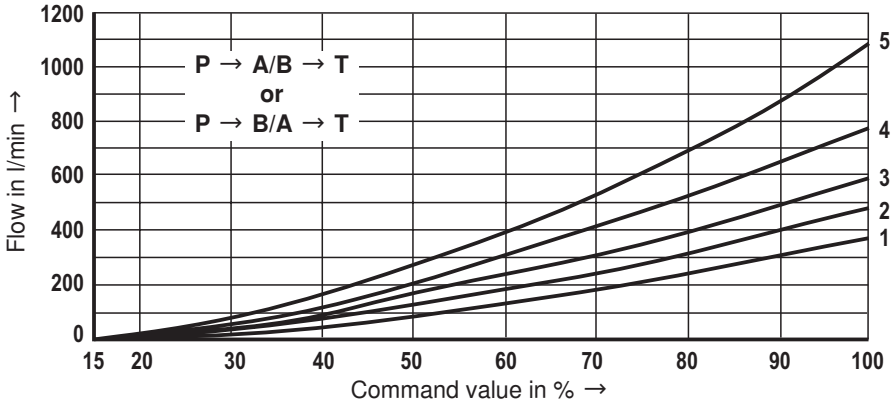

1 Δp = 10 bar, constant
2 Δp = 20 bar, constant
3 Δp = 30 bar, constant
4 Δp = 50 bar, constant
5 Δp = 100 bar, constant

520 l/min rated flow at 10 bar valve pressure differential

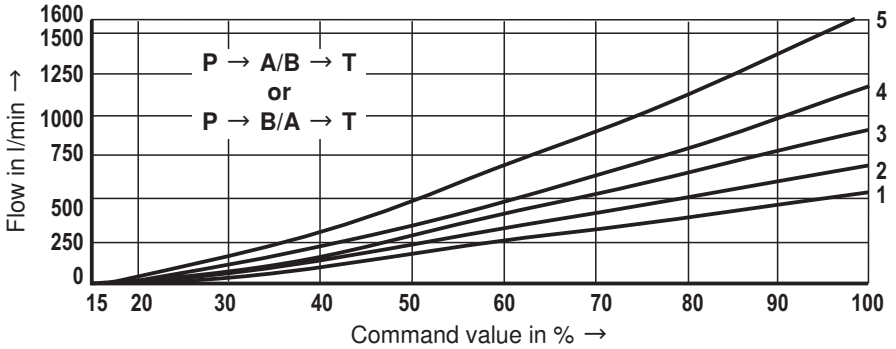

1 Δp = 10 bar, constant
2 Δp = 20 bar, constant
3 Δp = 30 bar, constant
4 Δp = 50 bar, constant
5 Δp = 100 bar, constant

Δp = valve pressure differential according to DIN 24311 (inlet pressure p_P minus load pressure p_L minus return flow pressure p_T)

Transition functions with stepped, electric input signals, measured at p_{St} = 50 bar

Type 4WRZ...

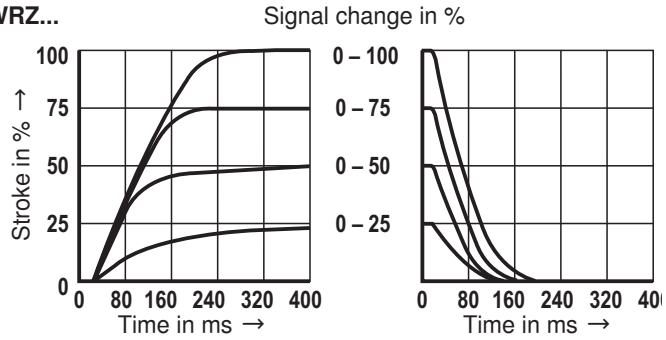

Type 4WRZE...

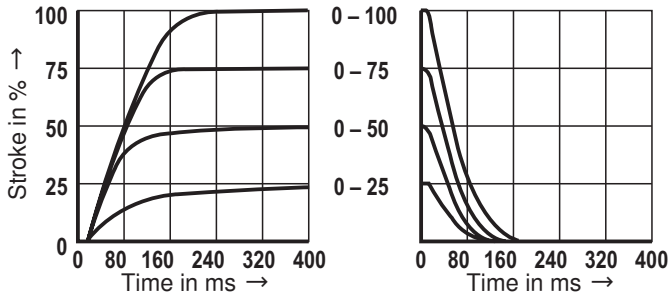

Characteristic curves size 52 (control spool "E, W6-, EA, W6A" as well as HLP46, ϑ_{oil} = 40 °C ±5 °C and p = 100 bar)

1000 l/min rated flow at 10 bar valve pressure differential

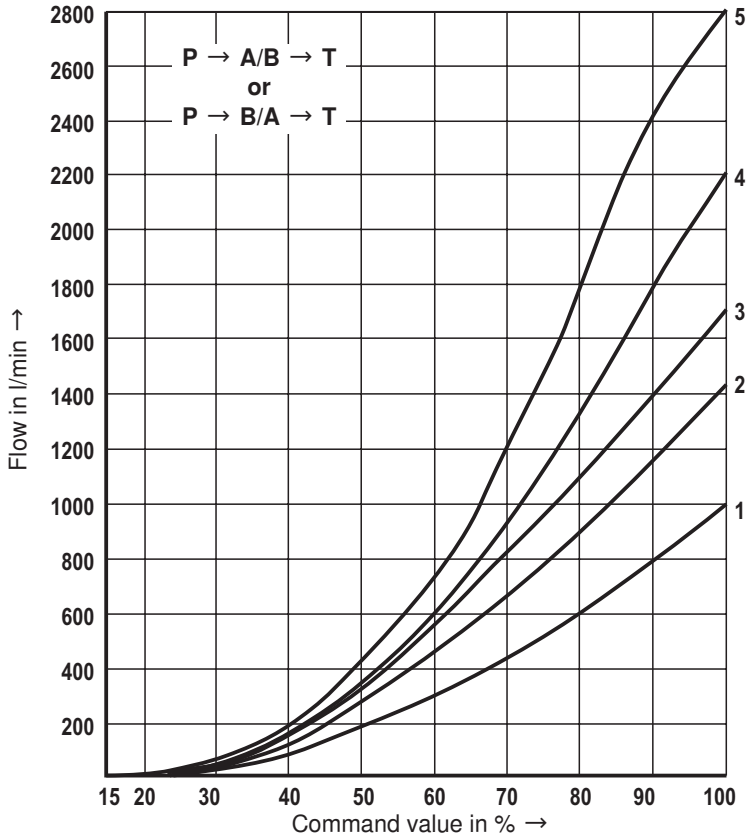

1 Δp = 10 bar, constant
2 Δp = 20 bar, constant
3 Δp = 30 bar, constant
4 Δp = 50 bar, constant
5 Δp = 100 bar, constant

Δp = valve pressure differential according to DIN 24311 (inlet pressure p_P minus load pressure p_L minus return flow pressure p_T)

Transition functions with stepped, electric input signals, measured at p_{St} = 50 bar

Type .WRZ…

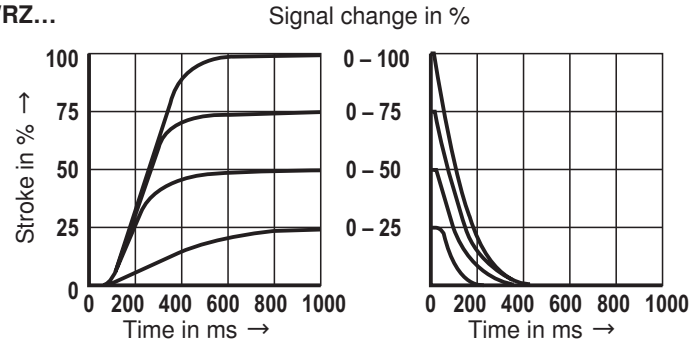

Type .WRZE…

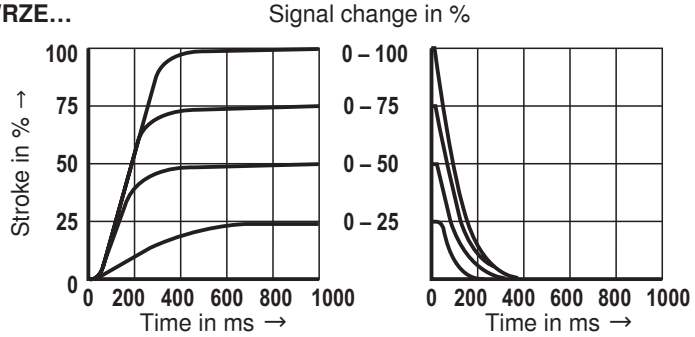

Dimensions: Size 10 (dimensions in mm)

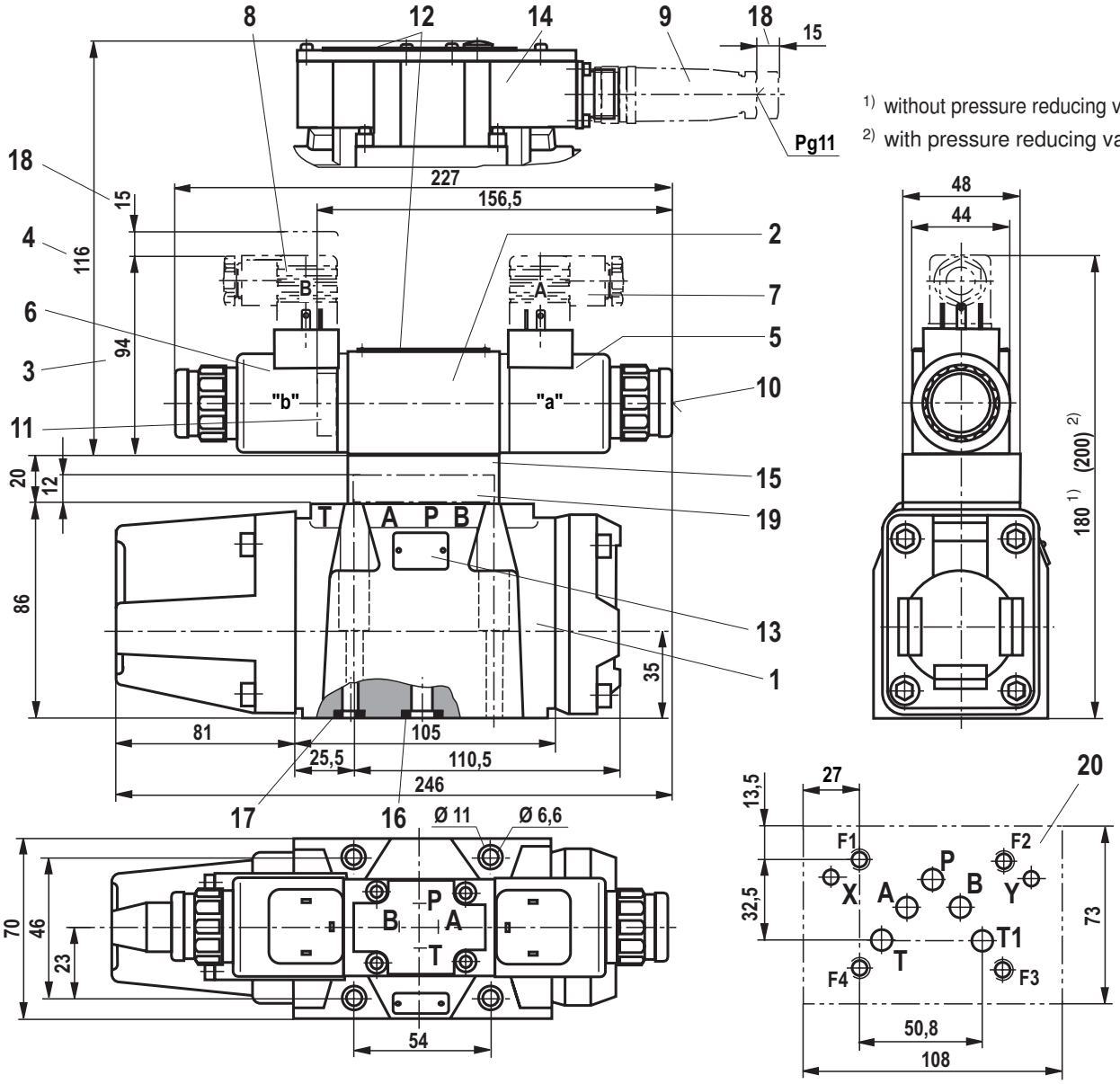

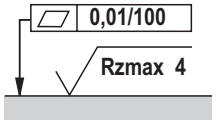

Required surface quality of the valve contact surface

1 Main valve
2 Pilot control valve
3 Dimension for version "4WRZ..." (**not** seawater-resistant)
4 Dimension for version "4WRZE..."
5 Proportional solenoid "a"
6 Proportional solenoid "b"
7 Mating connector "A", separate order, see page 27
8 Mating connector "B", separate order, see page 27
9 Mating connector, separate order, see page 27
10 Concealed manual override "N9"
11 Plug screw for valves with one solenoid
12 Name plate for pilot control valve
13 Name plate for main valve
14 Integrated electronics (OBE)
15 Pressure reducing valve "D3"
16 Identical seal rings for ports A, B, P, T, and T1
17 Identical seal rings for ports X and Y
18 Space required to remove the mating connector
19 Diversion plate (type 4WRH...)
20 Machined installation surface, porting pattern according to ISO 4401-05-05-0-05, ports X and Y as required

For subplates and valve mounting screws, see page 27

Dimensions: Size 16 (dimensions in mm)

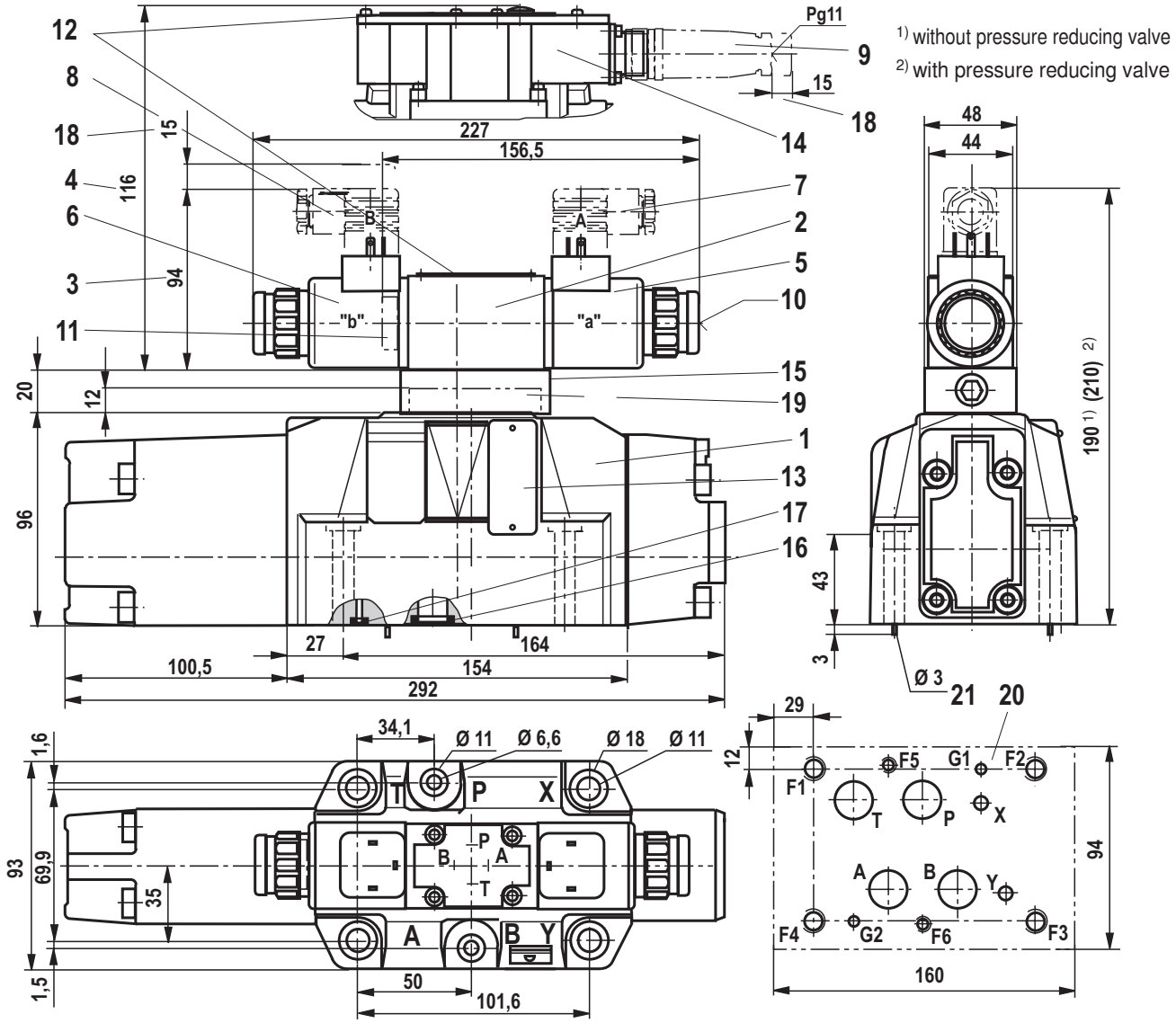

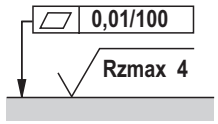

Required surface quality of the valve contact surface

1 Main valve
2 Pilot control valve
3 Dimension for version "4WRZ..." (**not** seawater-resistant)
4 Dimension for version "4WRZE..."
5 Proportional solenoid "a"
6 Proportional solenoid "b"
7 Mating connector "A", separate order, see page 27
8 Mating connector "B", separate order, see page 27
9 Mating connector, separate order, see page 27
10 Concealed manual override "N9"
11 Plug screw for valves with one solenoid
12 Name plate for pilot control valve
13 Name plate for main valve
14 Integrated electronics (OBE)
15 Pressure reducing valve "D3"
16 Identical seal rings for ports A, B, P, and T
17 Identical seal rings for ports X and Y
18 Space required to remove the mating connector
19 Diversion plate (type 4WRH...)
20 Machined installation surface, porting pattern according to ISO 4401-07-07-0-05, ports X and Y as required deviating from the standard: Ports A, B, P, T Ø20 mm.
21 Locking pin

For subplates and valve mounting screws, see page 27

Dimensions: Size 25 (dimensions in mm)

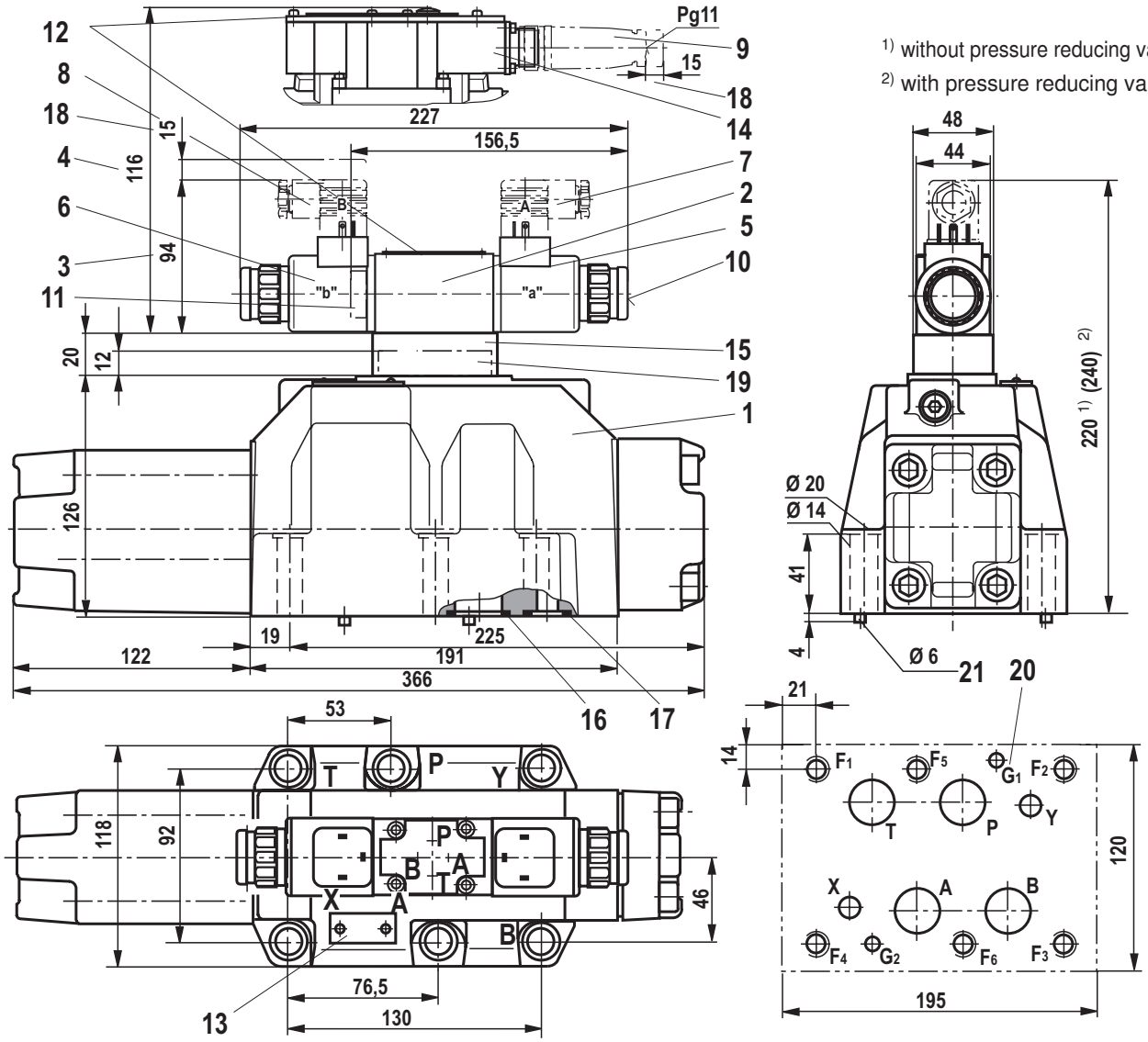

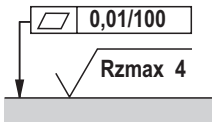

Required surface quality of the valve contact surface

1 Main valve
2 Pilot control valve
3 Dimension for version "4WRZ..." (**not** seawater-resistant)
4 Dimension for version "4WRZE..."
5 Proportional solenoid "a"
6 Proportional solenoid "b"
7 Mating connector "A", separate order, see page 27
8 Mating connector "B", separate order, see page 27
9 Mating connector, separate order, see page 27
10 Concealed manual override "N9"
11 Plug screw for valves with one solenoid
12 Name plate for pilot control valve
13 Name plate for main valve
14 Integrated electronics (OBE)
15 Pressure reducing valve "D3"
16 Identical seal rings for ports A, B, P, and T
17 Identical seal rings for ports X and Y
18 Space required for removing the mating connector
19 Diversion plate (type 4WRH...)
20 Machined installation surface, porting pattern according to ISO 4401-08-08-0-05, ports X and Y as required
21 Locking pin

For subplates and valve mounting screws, see page 27

Dimensions: Size 32 (dimensions in mm)

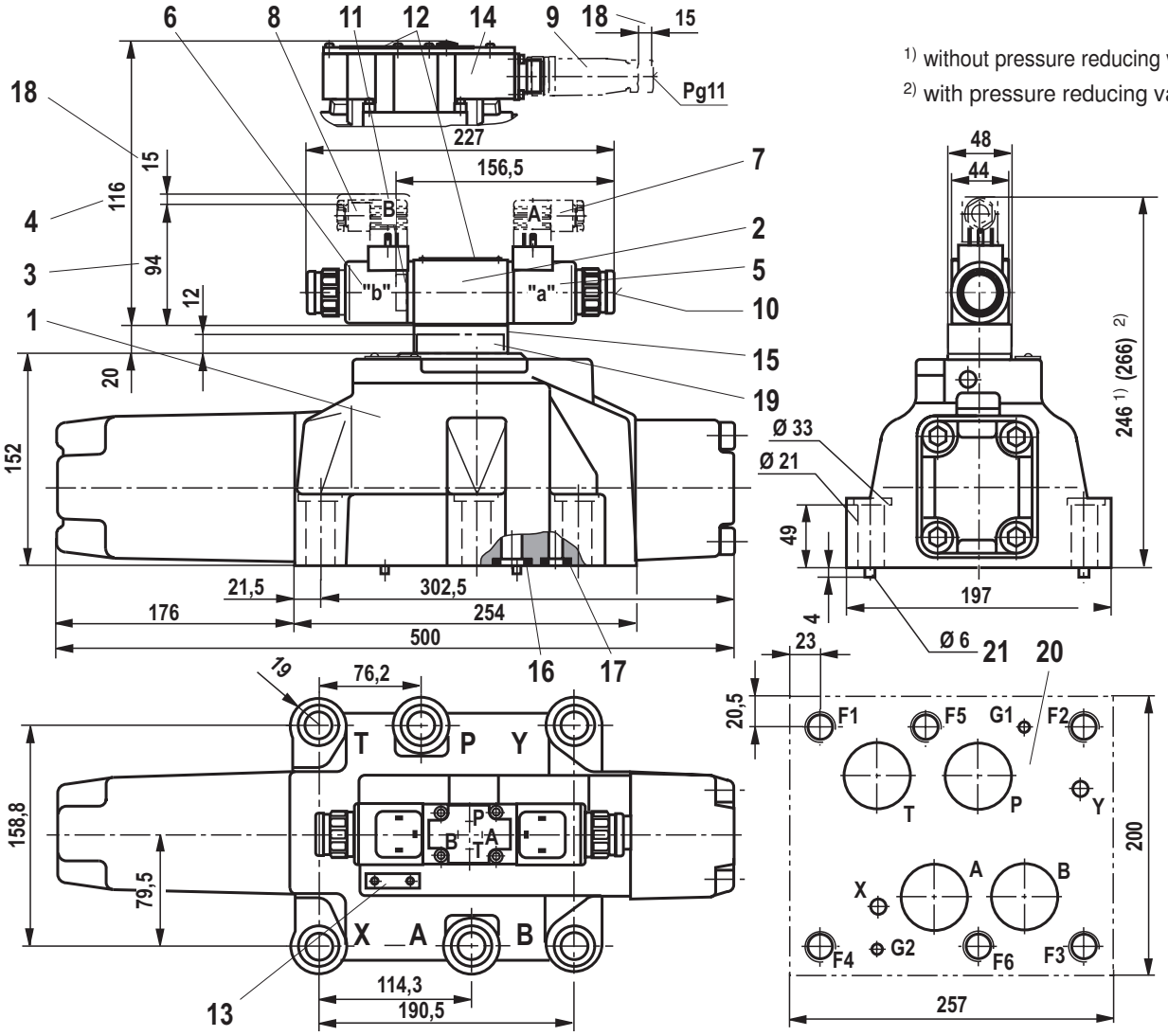

1) without pressure reducing valve
2) with pressure reducing valve

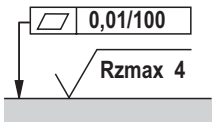

Required surface quality of the valve contact surface

1 Main valve
2 Pilot control valve
3 Dimension for version "4WRZ..." (**not** seawater-resistant)
4 Dimension for version "4WRZE..."
5 Proportional solenoid "a"
6 Proportional solenoid "b"
7 Mating connector "A", separate order, see page 27
8 Mating connector "B", separate order, see page 27
9 Mating connector, separate order, see page 27
10 Concealed manual override "N9"
11 Plug screw for valves with one solenoid
12 Name plate for pilot control valve
13 Name plate for main valve
14 Integrated electronics (OBE)
15 Pressure reducing valve "D3"
16 Identical seal rings for ports A, B, P, and T
17 Identical seal rings for ports X and Y
18 Space required for removing the mating connector
19 Diversion plate (type 4WRH...)
20 Machined installation surface, porting pattern according to ISO 4401-10-09-0-05, ports X and Y as required deviating from the standard:
– Ports A, B, T and P Ø38 mm.
21 Locking pin

For subplates and valve mounting screws, see page 27

Dimensions: Subplate mounting size 52 (dimensions in mm)

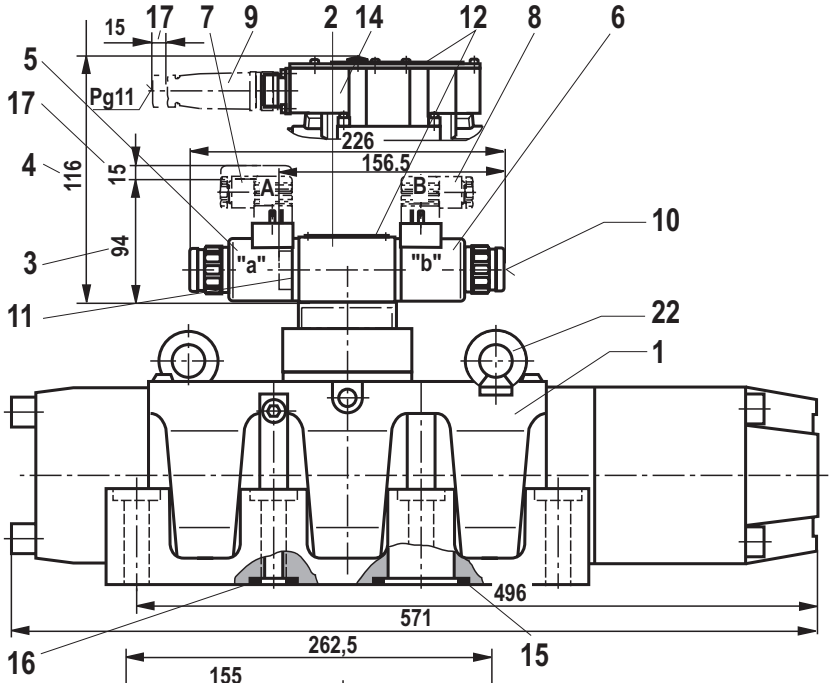

1) without pressure reducing valve

2) with pressure reducing valve

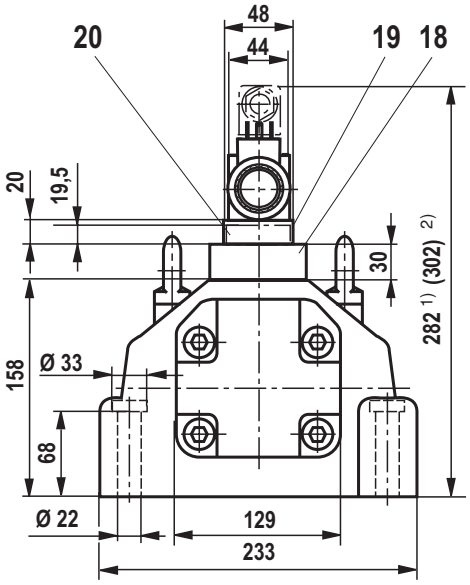

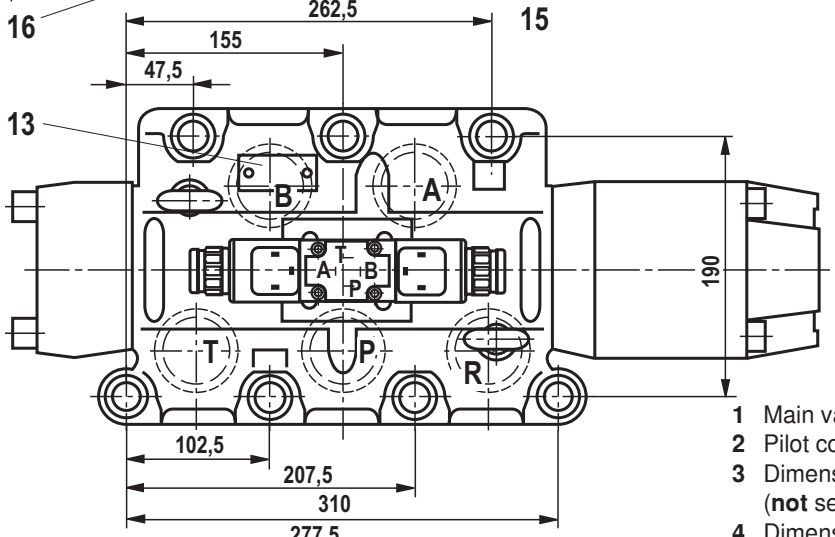

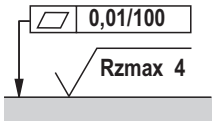

Required surface quality of the valve contact surface

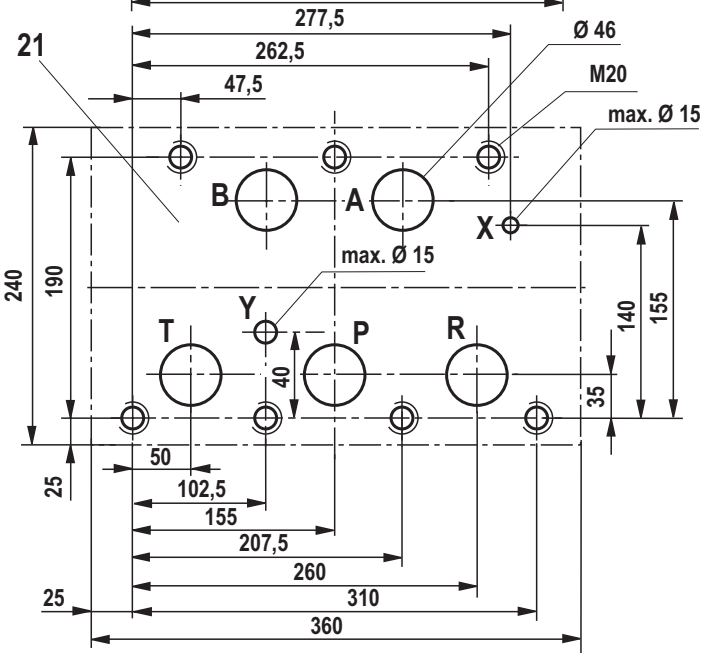

1 Main valve
2 Pilot control valve
3 Dimension for version "4WRZ..." (**not** seawater-resistant)
4 Dimension for version "4WRZE..."
5 Proportional solenoid "a"
6 Proportional solenoid "b"
7 Mating connector "A"
8 Mating connector "B"
9 Mating connector, separate order, see page 27
10 Concealed manual override "N9"
11 Plug screw for valves with one solenoid
12 Name plate for pilot control valve
13 Name plate for main valve
14 Integrated electronics (OBE)
15 Identical seal rings for ports A, B, P, T, and R
16 Identical seal rings for ports X, Y, and L
17 Space required to remove the mating connector
18 Adapter plate
19 Pressure reducing valve "D3"
20 Diversion plate (type 4WRH...)
21 Machined installation surface, porting pattern, ports X and Y as required
22 Transport aid

For subplates and valve mounting screws, see page 27

Dimensions: Flange connection size 52 (dimensions in mm)

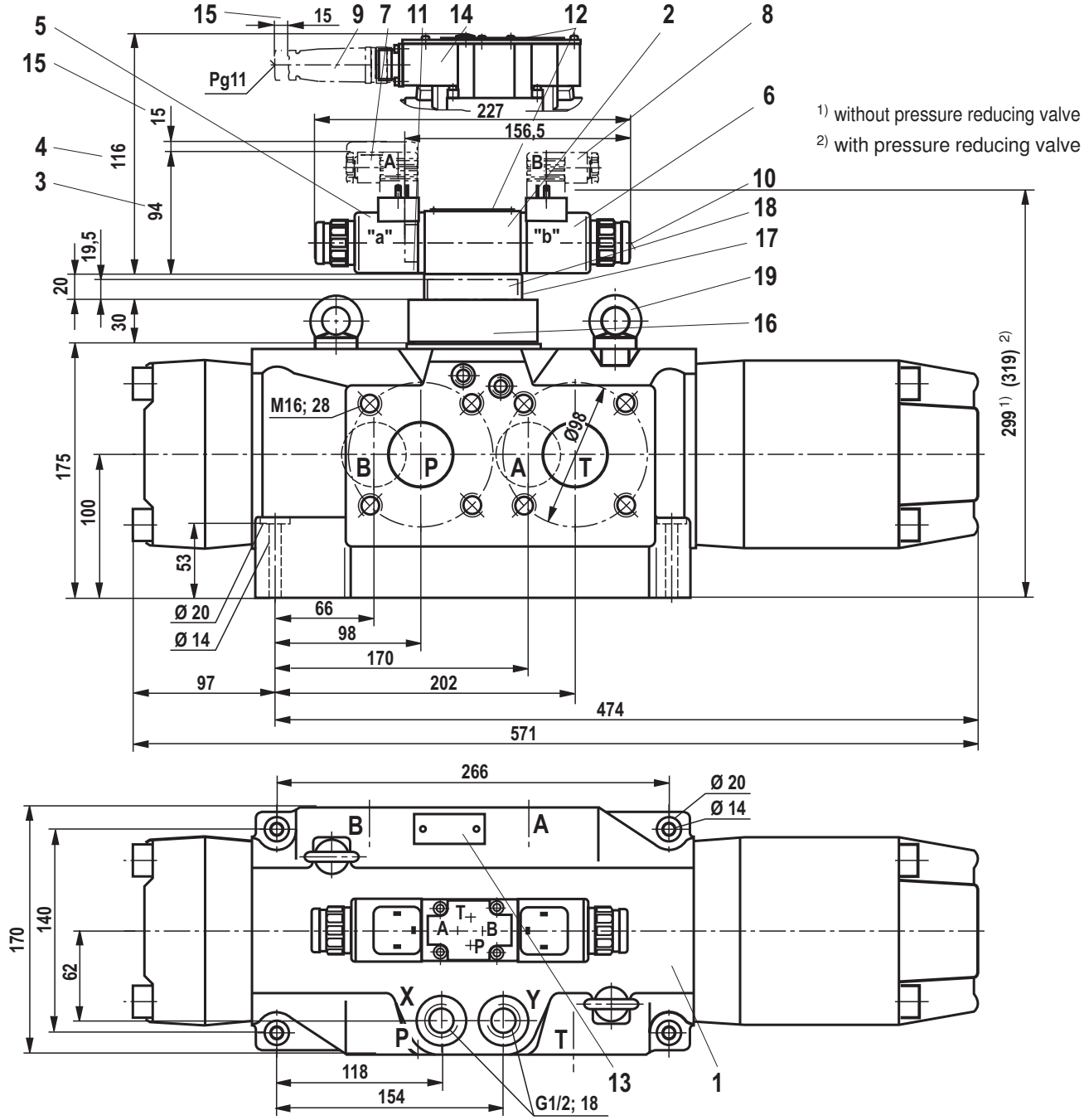

1 Main valve
2 Pilot control valve
3 Dimension for version "4WRZ..." (**not** seawater-resistant)
4 Dimension for version "4WRZE..."
5 Proportional solenoid "a"
6 Proportional solenoid "b"
7 Mating connector "A", separate order, see page 27
8 Mating connector "B", separate order, see page 27
9 Mating connector, separate order, see page 27
10 Concealed manual override "N9"
11 Plug screw for valves with one solenoid
12 Name plate for pilot control valve
13 Name plate for main valve
14 Integrated electronics (OBE)
15 Space required to remove the mating connector
16 Adapter plate
17 Pressure reducing valve "D3"
18 Diversion plate (type 4WRH...)
19 Transport aid

For subplates and valve mounting screws, see page 27

Accessories (not included in the scope of delivery)

Mating connectors			Material number
Mating connector for 4WRZ	DIN EN 175301-803	Solenoid "a", grey	R901017010
		Solenoid "b", black	R901017011
Mating connector for 4WRZE and 4WRZE...J...	DIN EN 175201-804		e.g. R900021267 (plastic)
			e.g. R900223890 (metal)

Hexagon socket head cap screws		Material number
Size 10	4x ISO 4762 - M6 x 45 - 10.9-flZn-240h-L Tightening torque M_A = 13.5 Nm ±10% or 4x ISO 4762 - M6 x 45 - 10.9 Tightening torque M_A = 15.5 Nm ±10%	R913000258
Size 16	2x ISO 4762 - M6 x 60 - 10.9-flZn-240h-L Tightening torque M_A = 12.2 Nm ±10% 4x ISO 4762 - M10 x 60 - 10.9-flZn-240h-L Tightening torque M_A = 58 Nm ±20% or 2x ISO 4762 - M6 x 60 - 10.9 Tightening torque M_A = 15.5 Nm ±10% 4x ISO 4762 - M10 x 60 - 10.9 Tightening torque M_A = 75 Nm ±20%	R913000115 R913000116
Size 25	6x ISO 4762 - M12 x 60 - 10.9-flZn-240h-L Tightening torque M_A = 100 Nm ±20% or 6x ISO 4762 - M12 x 60 - 10.9 Tightening torque M_A = 130 Nm ±20%	R913000121
Size 32	6x ISO 4762 - M20 x 80 - 10.9-flZn-240h-L Tightening torque M_A = 340 Nm ±20% or 6x ISO 4762 - M20 x 80 - 10.9 Tightening torque M_A = 430 Nm ±20%	R901035246
Size 52 (5WRZ52)	With a steel installation surface: 7x ISO 4762 - M20 x 90 - 10.9-flZn-240h-L Tightening torque M_A = 465 Nm ±20% With a cast iron installation surface: 7x ISO 4762 - M20 x 100 - 10.9-flZn-240h-L Tightening torque M_A = 465 Nm ±20% or With a steel installation surface: 7x ISO 4762 - M20 x 90 - 10.9 Tightening torque M_A = 610 Nm ±20% With a cast iron installation surface: 7x ISO 4762 - M20 x 100 - 10.9 Tightening torque M_A = 610 Nm ±20%	R913000397 R913000386
Size 52 (4WRZ52)	4x ISO 4762 - M12 x 70 - 10.9-flZn-240h-L Tightening torque M_A = 100 Nm ±20% or 4x ISO 4762 - M12 x 70 - 10.9 Tightening torque M_A = 130 Nm ±20%	R913000515

Subplates/connection flanges	Data sheet
Size 10	45054
Size 16	45056
Size 25	45058
Size 32	45060
Size 52	45501

When using type 4WRZ..., use the following throttle inserts in channel A and B of the pilot control valve:

Throttle insert	Ø in mm	Material number
Size 10	1.8	R900158510
Size 16	2.0	R900158547
Size 25	2.8	R900157948
Size 32	-	-
Size 52	-	-

Notes

Bosch Rexroth AG
Hydraulics
Zum Eisengießer 1
97816 Lohr am Main, Germany
Phone +49 (0) 93 52 / 18-0
documentation@boschrexroth.de
www.boschrexroth.de